THIS DRAWING IS UNPUBLISHED. RELEASED FOR PUBLICATION -,- .
© COPYRIGHT - By - ALL RIGHTS RESERVED.

LOC	DIST
GP	00

REVISIONS

P	LTR	DESCRIPTION	DATE	DWN	APVD
	M	REVISED PER ECO-15-004948	27APR2015	AP	SB

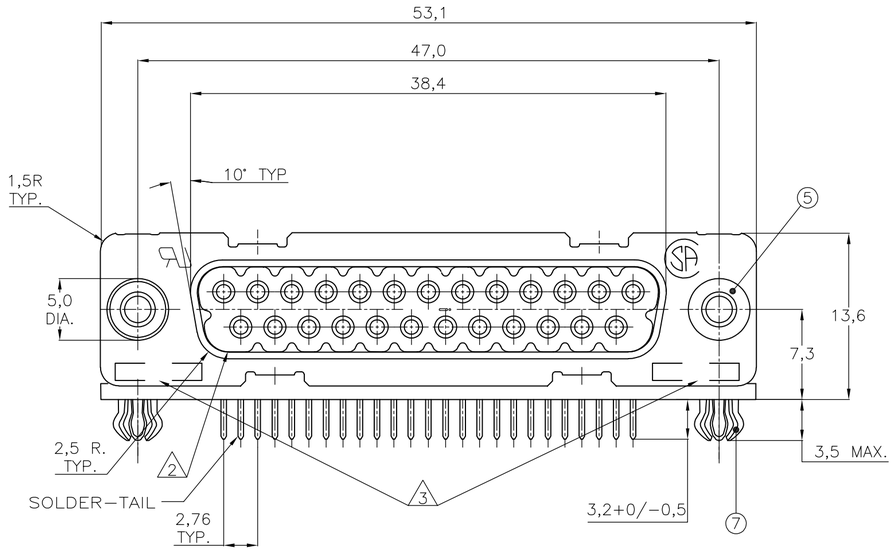

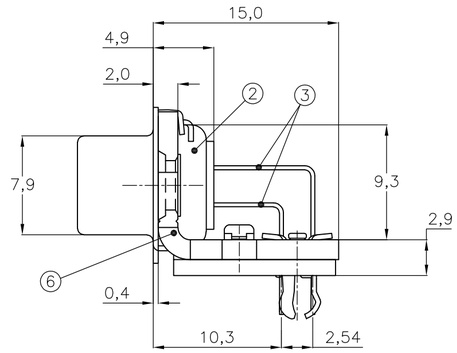

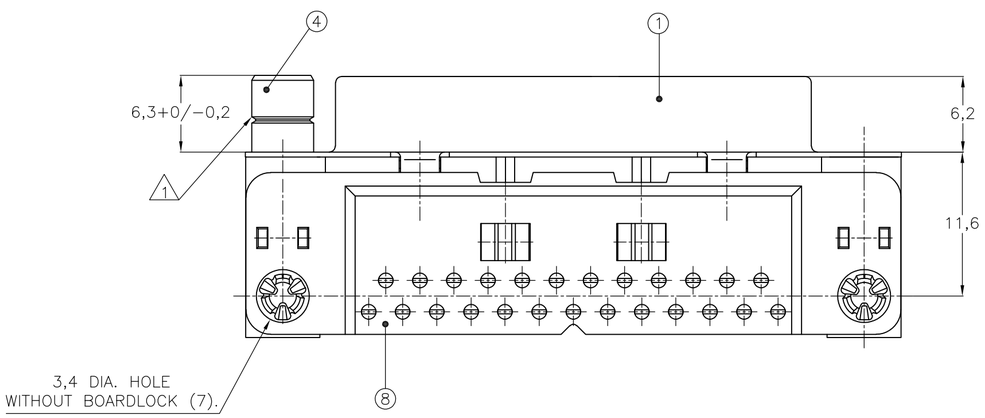

ACCESSORIES			106507-2	1-106507-2	2-106507-2	3-106507-2	4-106507-2	5-106507-2	6-106507-2	7-106507-2	8-106507-2	9-106507-2
	5	BUSHING WITH THROUGH-HOLE 3,1 DIA.	2					2				
	5	BUSHING WITH INNER THREAD 4-40 UNC		2					2			
	5	BUSHING WITH INNER THREAD M3			2					2		
	4	FEMALE SCREWLOCK WITH 4-40 UNC				2					2	
	4	FEMALE SCREWLOCK WITH M3					2					2
	7	BOARDLOCK	2	2	2	2	2					
	ITEM NO.	DESCRIPTION OF ACCESSORY					OBSOLETE			OBSOLETE		OBSOLETE

1. GROOVE INDICATES VERSION WITH 4-40 UNC INNER THREAD; WITHOUT GROOVE INDICATES VERSION WITH M3 INNER THREAD.
2. CAVITY IDENTIFICATION AT FRONT SIDE ONLY.
3. PART NUMBER AND DATE CODE.
4. AIR AND CREEPAGE DISTANCES ACCORDING TO DIN 41652.
5. CONTACT FINISH: GOLD FLASH OVER PALLADIUM-NICKEL PLATE OR GOLD PLATE ON THE MATING SURFACES, TIN PLATE ON THE SOLDER-TAILS, NICKEL UNDERPLATE ON THE ENTIRE CONTACT. MATING SURFACE MEETS PERFORMANCE LEVEL 2 PER DIN 41652.

ITEM NO./MATERIAL :

1 SHELL	: BRIGHT TIN PLATED STEEL
2 HOUSING	: GLASS FILLED POLYESTER, COLOR : BLACK
3 CONTACTS	: PHOSPHOR BRONZE (PLATING : SEE NOTES ABOVE)
4 FEMALE SCREWLOCK	: TIN PLATED STEEL (INNER THREAD 4-40 UNC OR M3)
5 BUSHING	: TIN PLATED STEEL (INNER THREAD 4-40 UNC OR M3 OR 3,1 DIA THROUGH-HOLE)
6 BRACKET	: TIN PLATED STEEL
7 BOARDLOCK	: TIN PLATED PHOSPHOR BRONZE
8 POST ALIGNMENT PLATE	: GLASS FILLED NYLON. COLOR : BLACK

RECOMMENDED P.C. BOARD HOLE-LAYOUT

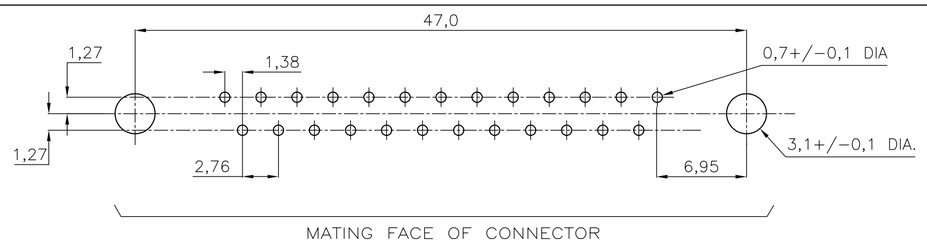

THIS DRAWING IS A CONTROLLED DOCUMENT.
DIMENSIONING AND TOLERANCING PER ASME Y14.5M-2009

DIMENSIONS: mm

TOLERANCES UNLESS OTHERWISE SPECIFIED:
0 PLC ± -
1 PLC ± 0.3
2 PLC ± 0.15
3 PLC ± -
4 PLC ± -
ANGLES ± 2°

MATERIAL -
FINISH -

DWN D. KESSLER 14JAN99
CHK W. SOOMERS -
APVD — -
PRODUCT SPEC —
APPLICATION SPEC —
WEIGHT —

TE Connectivity

NAME HD-20 SIZE 3 RIGHT ANGLE RECEPTACLE HEADER; MARK II+

SIZE	CAGE CODE	DRAWING NO	RESTRICTED TO
A2	00779	C-106507	—

CUSTOMER DRAWING | SCALE NTS | SHEET 1 OF 1 | REV M

106507