THIS DRAWING IS UNPUBLISHED. RELEASED FOR PUBLICATION -,- .
© COPYRIGHT - By - ALL RIGHTS RESERVED.

LOC	DIST
AD	00

REVISIONS

P	LTR	DESCRIPTION	DATE	DWN	APVD
	AA3	REVISED PER ECO-11-004917	11MAR11	RK	HMR

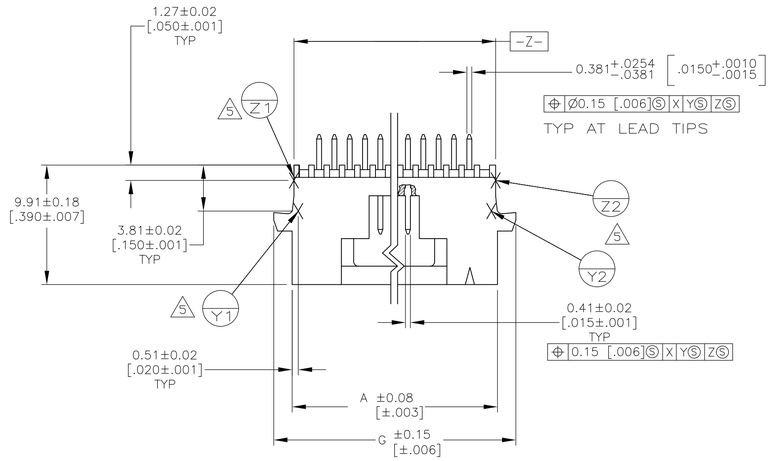

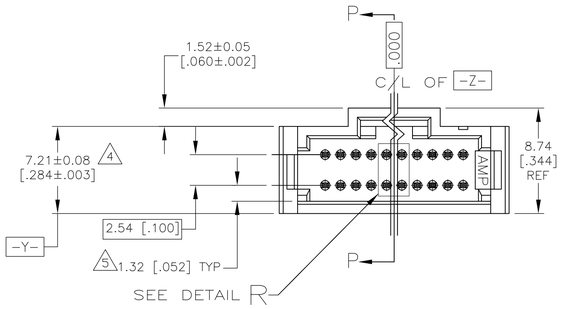

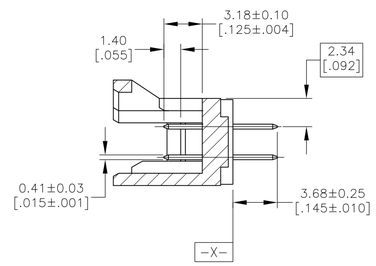

SECTION P-P

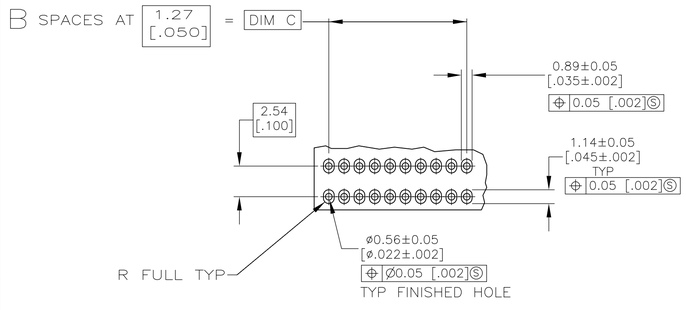

RECOMMENDED BOARD LAYOUT

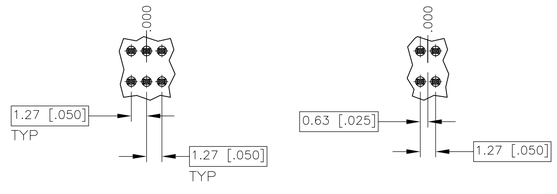

BASIC DIMENSIONS FOR EVEN NUMBER OF SPACES (SEE TABLE)

BASIC DIMENSIONS FOR ODD NUMBER OF SPACES (SEE TABLE)

DETAIL R

1. CONTACT AREA PLATED WITH .000762[.000030] MIN GOLD; SOLDER LEADS PLATED WITH .00381[.000150] MIN TIN-LEAD ALL OVER .00127[.000050] MIN NICKEL
2. POINT OF MEASUREMENT FOR PLATING THICKNESS
3. DIMENSION APPLIES AT BASE OF SHROUD
4. THE NOTED DIMENSIONS APPLY AT THE INTERSECTION OF THE POST AND HOUSING
5. Y1 Z1 ARE LOCATED THE SAME AS Y2 Z2 OPPOSITE SIDE OF HOUSING AS SHOWN
6. HOUSING: THERMOPLASTIC, COLOR-BLACK. POSTS: COPPER ALLOY.
7. CONTACT AREA PLATED WITH 0.000762 [.000030] MIN GOLD, SOLDER LEADS PLATED WITH 0.00381 [.000150] MIN TIN, ALL OVER 0.00127 [.000050] MIN NICKEL.
8. PRELIMINARY PART - NOT RELEASED FOR PRODUCTION.
9. ROHS 2002/95/EC COMPLIANT.
10. OBSOLETE PARTS: OBSOLETE CIS STREAMLINING PER D.RENAUD/D.SINISI

	G	C	B	A	NO OF POSN	PART NUMBER
9 10 OBSOLETE	27.79 [1.094]	20.32 [.800]	15	24.89 [.980]	34	7 ~~6-104666-3~~
9 10 OBSOLETE	12.55 [.494]	5.08 [.200]	4	9.65 [.380]	10	7 ~~6-104666-2~~
9	22.71 [.894]	15.24 [.600]	12	19.81 [.780]	26	7 6-104666-1
9	21.44 [.844]	13.97 [.550]	11	18.54 [.730]	24	7 6-104666-0
9	16.36 [.644]	8.89 [.350]	7	13.46 [.530]	16	7 5-104666-9
9 10 OBSOLETE	49.38 [1.944]	46.99 [1.850]	33	46.48 [1.830]	68	7 ~~5-104666-8~~
9 10 OBSOLETE	44.30 [1.744]	36.83 [1.450]	29	41.40 [1.630]	60	7 ~~5-104666-7~~
9 10 OBSOLETE	69.70 [2.744]	62.23 [2.450]	49	66.80 [2.630]	100	7 ~~5-104666-6~~
9	57.00 [2.244]	49.53 [1.950]	39	54.10 [2.130]	80	7 5-104666-5
9	37.95 [1.494]	30.48 [1.200]	24	35.05 [1.380]	50	7 5-104666-4
9	31.60 [1.244]	24.13 [.950]	19	28.70 [1.130]	40	7 5-104666-3
9	25.25 [.994]	17.78 [.700]	14	22.35 [.880]	30	7 5-104666-2
9	18.90 [.744]	11.43 [.450]	9	16.00 [.630]	20	7 5-104666-1
8	27.79 [1.094]	20.32 [.800]	15	24.89 [.980]	34	1 1-104666-3
8	12.55 [.494]	5.08 [.200]	4	9.65 [.380]	10	1 1-104666-2
	22.71 [.894]	15.24 [.600]	12	19.81 [.780]	26	1 1-104666-1
	21.44 [.844]	13.97 [.550]	11	18.54 [.730]	24	1 1-104666-0
	16.36 [.644]	8.89 [.350]	7	13.46 [.530]	16	1 104666-9
10 OBSOLETE	49.38 [1.944]	41.91 [1.650]	33	46.48 [1.830]	68	1 ~~104666-8~~
	44.30 [1.744]	36.83 [1.450]	29	41.40 [1.630]	60	1 104666-7
	69.70 [2.744]	62.23 [2.450]	49	66.80 [2.630]	100	1 104666-6
	57.00 [2.244]	49.53 [1.950]	39	54.10 [2.130]	80	1 104666-5
	37.95 [1.494]	30.48 [1.200]	24	35.05 [1.380]	50	1 104666-4
	31.60 [1.244]	24.13 [.950]	19	28.70 [1.130]	40	1 104666-3
	25.25 [.994]	17.78 [.700]	14	22.35 [.880]	30	1 104666-2
	18.90 [.744]	11.43 [.450]	9	16.00 [.630]	20	1 104666-1

THIS DRAWING IS A CONTROLLED DOCUMENT.

DIMENSIONS: mm[INCHES]

TOLERANCES UNLESS OTHERWISE SPECIFIED:
0 PLC ± -
1 PLC ± -
2 PLC ± 0.13[.005]
3 PLC ± -
4 PLC ± -
ANGLES ± -

MATERIAL 6
FINISH SEE TABLE

DWN BSV 19AUG04
CHK -
APVD D L SIMPSON
PRODUCT SPEC 108-1093
APPLICATION SPEC 114-25031
WEIGHT -

TE Connectivity

NAME HEADER ASSY, VERTICAL SHROUDED DOUBLE ROW W/SIDE & END LATCHES AMPMODU SYSTEM 50

SIZE	CAGE CODE	DRAWING NO	RESTRICTED TO
A1	00779	C-104666	-

CUSTOMER DRAWING | SCALE 4:1 | SHEET 1 OF 1 | REV AA3

4805 (3/11)